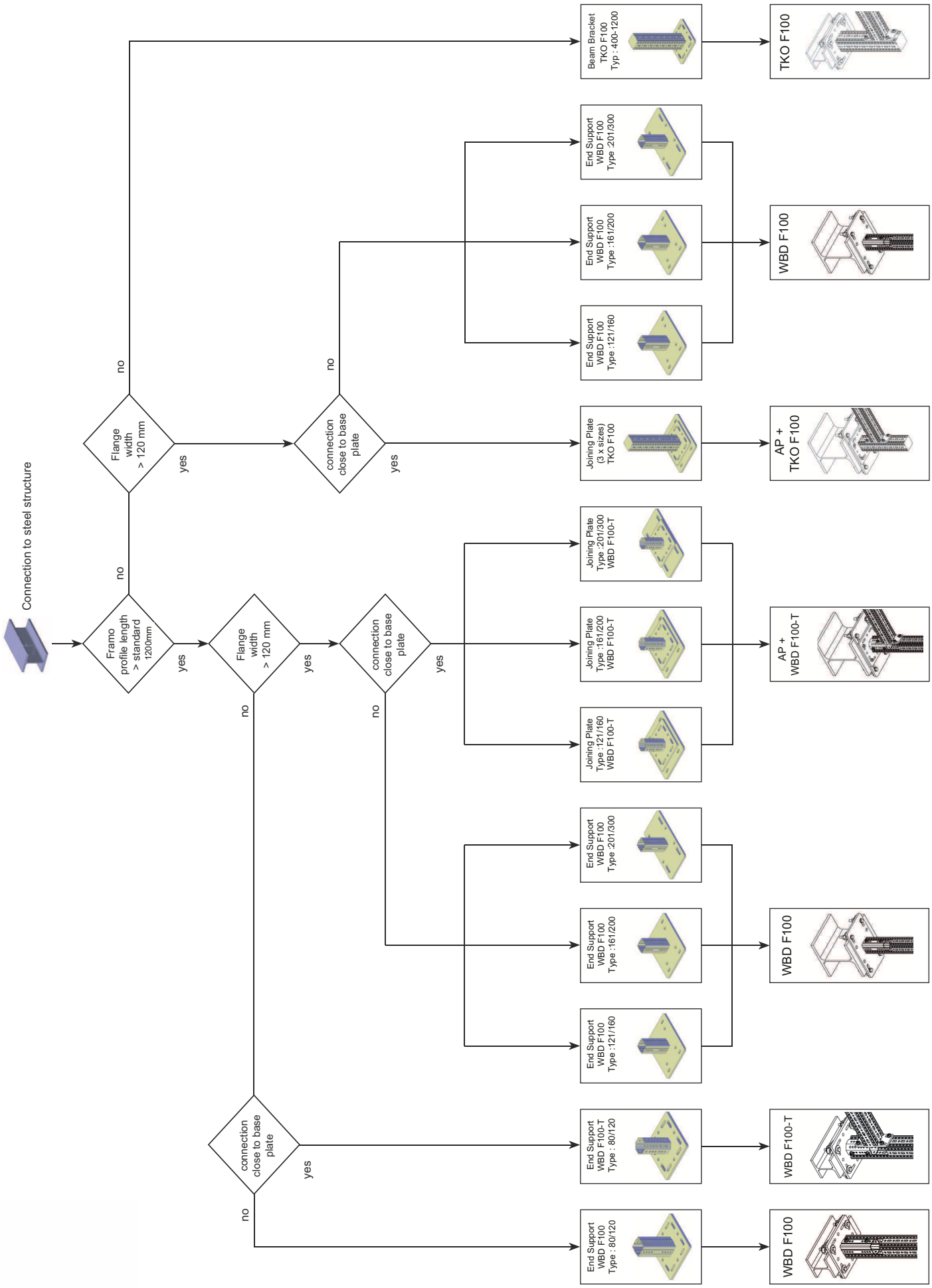
Connection to steel structure
Framo profile length > standard 1200mm
yes
no
Flange width > 120 mm
yes
no
connection close to base plate
yes
no
Beam Bracket TKO F100 Typ : 400-1200
TKO F100
End Support WBD F100 Type :201/300
End Support WBD F100 Type :161/200
End Support WBD F100 Type :121/160
WBD F100
Joining Plate (3 x sizes) TKO F100
AP + TKO F100
Joining Plate Type :201/300 WBD F100-T
Joining Plate Type :161/200 WBD F100-T
Joining Plate Type : 121/160 WBD F100-T
AP + WBD F100-T
End Support WBD F100 Type :201/300
End Support WBD F100 Type :161/200
End Support WBD F100 Type :121/160
WBD F100
End Support WBD F100-T Type : 80/120
WBD F100-T
End Support WBD F100 Type : 80/120
WBD F100